MSA
The Safety Company

Operating Manual

FL500 UV/IR Flame Detector

Order No.: 10193213/01
CR 800000033289

WARNING!

Read this manual carefully before using and maintaining the device. The device will perform as designed only if it is used and maintained in accordance with the manufacturer's instructions. Otherwise, it can fail to perform as designed and persons who rely on this device for their safety could sustain serious injury or death.

The warranties made by General Monitors with respect to the product are voided if the product is not installed, used and serviced in accordance with the instructions in this manual. Protect yourself and your employees by following the instructions.

Read and observe the WARNINGS and CAUTIONS inside. For any additional information relative to use or repair, call 1-800-MSA-2222 during regular working hours.

The Safety Company

1000 Cranberry Woods Drive
Cranberry Township, PA 16066
USA
Phone 1-800-MSA-2222
Fax 1-800-967-0398

For your local MSA contacts please go to our website ***www.MSAsafety.com***

© MSA 2019. All rights reserved

Contents

1 Safety Regulations . . . 5

1.1 Correct Use . . . 5
1.2 Liability Information . . . 6
1.3 Warranty . . . 6
1.3.1 Limited Express Warranty . . . 6
1.3.2 Sole Remedy . . . 6
1.3.3 Exclusion of Consequential Damage . . . 6

2 Description . . . 7

2.1 Overview . . . 7
2.2 Continuous Optical Path Monitoring (COPM) . . . 8
2.3 LED Operation Mode Definitions . . . 9

3 Installation . . . 10

3.1 Required Tools . . . 10
3.2 Locations . . . 10
3.2.1 Field of View . . . 11
3.2.2 Environmental Factors . . . 17
3.3 Mounting . . . 17
3.4 Wiring . . . 20
3.5 Terminal Connections . . . 22
3.5.1 TB2, Alarm High Relay Connection . . . 22
3.5.2 TB2, Alarm Low Relay Connection . . . 23
3.5.3 TB1, Fault Relay Connection . . . 23
3.5.4 Alarm Reset Switch . . . 23
3.5.5 Analog Output, Modbus and HART . . . 24
3.6 Cable Lengths . . . 25
3.7 Power Supply . . . 25
3.8 Chassis Ground . . . 25
3.9 Fire Cards or Panels . . . 25
3.10 Cable Termination in a Nonhazardous Area . . . 26

4 Operation . . . 27

4.1 Start-Up . . . 27
4.2 Changing Device Settings . . . 27
4.2.1 Using the DIP Switch . . . 27
4.2.2 Using Modbus or HART . . . 29
4.3 Sensitivity Check . . . 29
4.3.1 TL105 Test Lamp . . . 29
4.3.2 Alarm Test Feature . . . 30

5 Maintenance . . . 31

5.1 Regular Maintenance . . . 31
5.2 Cleaning the Optical Window . . . 31
5.3 Annual Maintenance . . . 32

6 Storage . . . 33

US

7 Troubleshooting . . . 34
7.1 Troubleshooting Table . . . 34
7.2 Returning the Device for Repairs . . . 35
7.3 Removing the Device from Service Permanently . . . 35
7.4 References and Other Sources of Help . . . 35

8 Specifications . . . 36
8.1 System Specifications . . . 36
8.2 Mechanical Specifications . . . 37
8.3 Electrical Specifications . . . 37
8.4 Environmental Specifications . . . 38

9 Approvals . . . 39

US

1 Safety Regulations

1.1 Correct Use

WARNING!

- Do NOT install or operate the device until you read and understand the instructions in this manual. Only qualified personnel are approved to operate and do maintenance on the device.
  NE PAS INSTALLER NI UTILISER CET ÉQUIPEMENT SANS AVOIR D'AVOIR LU ET COMPRIS TOUTES LES DIRECTIVES, TOUS LES AVERTISSEMENTS ET TOUTES LES MISES EN GARDE DANS LE MANUEL D'INSTRUCTIONS.
- Do NOT remove the cover from the device when the device is in operation or in an explosive atmosphere.
  NE PAS OUVRIR LORSQUE SOUS TENSION OU EN PRÉSENCE D'UNE ATMOSPHÈRE EXPLOSIVE.
- Install a conduit seal within 18 in. (46 cm) of the device enclosure.
  INSTALLER LE JOINT DU CONDUIT DANS UN INTERVALLE DE 18 PO DU BOÎTIER.
- Repair or alteration of the device beyond the scope of the maintenance instructions in this manual or by anyone other than General Monitors or General Monitors-approved service personnel can cause incorrect operation of the device and put persons who use this device for their safety at risk of serious injury or death.
- An approved electrician must do electrical wiring.
- All wiring must satisfy the requirements of the applicable National Electrical Code (NEC), Canadian Electrical Code (CEC), and local electrical safety codes.
- Make sure that field connections to the FL500 are applicable for the location and obey the wiring requirements of the NEC, CEC, and local electrical safety codes.
- Do not install or operate a device that is damaged.
- Install the device in a location away from conditions (such as high-pressure steam) where electrostatic charge can collect on nonconducting surfaces. This equipment uses an external nonmetallic coating. If extreme levels of electrostatic charge collect, ignition can occur.
- Make sure that there is no physical blockage from permanent objects such as structures and equipment or temporary objects such as personnel and vehicles in the sensor's field of view. If there is physical blockage in the sensor's field of view, the device cannot accurately monitor the area for flame.
- Make sure that there is no ice, dirt, or debris on the optical window. Blockage of the optical window can result in a Fault condition.
- During a Fault condition, the device does not monitor the area for flame.
- Keep the device safe from vibration and mechanical shock, which can cause damage.
- Do NOT connect or disconnect equipment when power is supplied to the device. Doing so can result in serious damage to the equipment. The warranty does not apply to equipment that is damaged in this way.
- The device has components that can be damaged by electrostatic discharge (ESD). When you do work with the device wiring, be careful to touch only the connection points. The warranty does not supply coverage for components that are damaged by ESD.
- Use ONLY a damp cloth to clean the device. Otherwise, electrical shock or ignition from ESD can occur.
  Failure to obey these warnings can result in serious injury or death.

For dimensional information about the flameproof joints, contact General Monitors.

US

Specific Conditions of Safe Use

- Potential electrostatic charging hazard; use only a damp cloth for cleaning.
- Contact General Monitors if dimensional information of flameproof joints is needed.
- Field connections to the FL500 shall be appropriately certified for the location and installed in accordance with wiring method requirements of the local electrical code as applicable.

1.2 Liability Information

General Monitors accepts no liability in cases where the product has been used inappropriately or not as intended.

The selection and use of this product must be under the direction of a qualified safety professional who has carefully evaluated the specific hazards of the jobsite where it will be used and who is completely familiar with the product and its limitations. The selection and use of this product and its incorporation into the safety scheme of the jobsite is the exclusive responsibility of the employer.

Changes and modifications not expressly approved by the manufacturer will void the user's authority to operate the equipment.

1.3 Warranty

1.3.1 Limited Express Warranty

General Monitors warrants the product to be free from mechanical defects and faulty workmanship for a period of two (2) years from the date of sale by General Monitors, provided that the product is maintained and used in accordance with General Monitors' instructions and/or recommendations. General Monitors makes no warranty concerning components or accessories not manufactured by General Monitors, but will pass on to the Purchaser all warranties of manufacturer.

This warranty is valid only if the product is maintained and used in accordance with General Monitors' instructions and/or recommendations. General Monitors shall be released from all obligations under this warranty in the event that repairs or modifications are made by persons other than its own or authorized service personnel, or if the warranty claim results from accident, alteration, misuse, or abuse.

No agent, employee or representative of General Monitors has authority to bind General Monitors to any affirmation, representation or modification of the warranty concerning the product.

THIS WARRANTY IS STRICTLY LIMITED TO THE TERMS HEREOF AND IN LIEU OF ALL OTHER WARRANTEES, EXPRESSED, IMPLIED, OR STATUTORY INCLUDING, BUT NOT LIMITED TO, ANY IMPLIED WARRANTY OF MERCHANTABILITY OR FITNESS FOR A PARTICULAR PURPOSE.

1.3.2 Sole Remedy

It is expressly agreed that Purchaser's sole and exclusive remedy for breach of the above warranty, for any tortious conduct of General Monitors, or for any other cause of action, shall be the repair or replacement, at General Monitors' option, of any equipment or parts thereof, which after examination by General Monitors is proven to be defective. Replacement equipment and/or parts will be provided at no cost to Purchaser, F.O.B. Seller's Plant. Failure of General Monitors to successfully replace any nonconforming equipment or parts shall not cause the remedy established hereby to fail of its essential purpose.

1.3.3 Exclusion of Consequential Damage

Purchaser specifically understands and agrees that under no circumstances will General Monitors be liable to Purchaser for economic, special, incidental, or consequential damages or losses of any kind whatsoever, including but not limited to, loss of anticipated profits and any other loss caused by reason of non-operation of the goods. This exclusion is applicable to claims for breach of warranty, tortious conduct or any other cause of action against General Monitors.

2 Description

2.1 Overview

The FL500 ultraviolet/infrared (UV/IR) flame detector, referred to hereafter as the "FL500" or "device," uses a UV radiation-sensitive phototube and an IR detector to sense specific wavelengths in the UV and IR spectral regions. The UV and IR detectors send signals about changes in the intensity of UV and IR radiation to a microcomputer to activate Alarm Low, Alarm High, and Fault output. A flicker discrimination circuit in the IR circuitry prevents false alarms caused by lightning, arc-welding, hot objects, and other sources of radiation. The inherent flickering of a flame supplies the necessary modulation to activate the IR circuit.

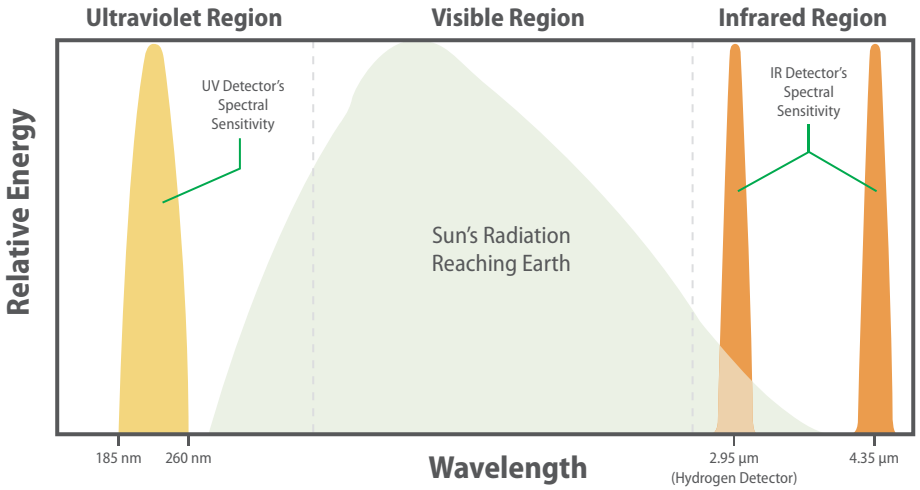

Fig. 1 Spectral Response of UV and IR Radiation Detectors

If the device senses only UV radiation (such as arc welding) or only IR radiation (such as a large modulating hot object), an alarm does not occur. If the device senses both UV and IR radiation in the correct combination and intensity, as set by an algorithm in the microcomputer, the device identifies a fire and sends the following output:

- 4 - 20 mA signal
- Immediate Alarm Low output
- Time-delayed Alarm High output
- RS-485 Modbus RTU output
- HART communication

The FL500 has the following features:

- Compact unitized design
- Wide field of view
- Continuous optical path monitoring (COPM)
- 4 - 20 mA source or sink, alarm relays, and Modbus RTU RS-485 standard
- HART 7 communication
- False alarm prevention

US

Fig. 2 FL500 UV/IR Flame Detector

The FL500 is compatible with the General Monitors TA402A trip amplifier, FL802 controller, and other equipment that accepts 4 - 20 mA output. The device can be connected directly with alarm and suppression devices or switched input modules through integral relays. If the HART protocol is used with the FL802 controller, it is necessary to use the special HART signal (1.25 - 20 mA).

Because the FL802 controller is not CE marked, it cannot be supplied to the European Union (EU).

2.2 Continuous Optical Path Monitoring (COPM)

COPM does a check of the device's optical path (from the internal UV and IR detectors through an air gap then the optical window) and related electronic circuitry every 2 minutes. If the optical window is blocked by unwanted objects such as ice, dirt, or debris for two consecutive checks, the device activates the following Fault output:

- 2.0 mA signal
- Fault relay de-energizes
- Modbus signal

After a COPM Fault occurs, COPM occurs every 30 seconds until the Fault condition is removed. When the Fault condition is removed, COPM continues every 2 minutes.

Because COPM does a check of the optical path every 2 minutes and two consecutive checks must fail before a Fault occurs, it can be up to 3 minutes before the device identifies a blockage.

Refer to Section 5.2 "Cleaning the Optical Window" for maintenance instructions.

2.3 LED Operation Mode Definitions

The LEDs show the following modes of operation for the device.

Device Status	Alternate Mode	Standard Mode
No Power	All LEDs OFF	
Initial Power On	All LEDs blink alternately for 10 s	
Ready/Normal	Green LED = ON	Green LED = ON with heartbeat (5 s ON, 0.5 s OFF)
	Yellow LED = OFF	
	Red LED = OFF	
Fault - COPM	Green LED = ON	Green LED = OFF
	Yellow LED = Blinking slowly (1 Hz)	
	Red LED = OFF	
Fault - Other	Green LED = ON	Green LED = OFF
	Yellow LED = ON	
	Red LED = OFF	
Alarm Low	Green LED = ON	Green LED = OFF
	Yellow LED = OFF	
	Red LED = Blinking slowly (1 Hz)	
Alarm High	Green LED = ON	Green LED = OFF
	Yellow LED = OFF	
	Red LED = ON	

3 Installation

WARNING!

- Do not install or operate a device that is damaged.
- Install the device in a location away from conditions (such as high-pressure steam) where electrostatic charge can collect on nonconducting surfaces. This equipment uses an external nonmetallic coating. If extreme levels of electrostatic charge collect, ignition can occur.
- Make sure that there is no physical blockage from permanent objects such as structures and equipment or temporary objects such as personnel and vehicles in the sensor's field of view. If there is physical blockage in the sensor's field of view, the device cannot accurately monitor the area for flame.
- Keep the device safe from vibration and mechanical shock, which can cause damage.
  Failure to obey these warnings can result in serious injury or death.

3.1 Required Tools

- 5 mm Allen wrench (included with the device)
- Flat-blade screwdriver, maximum 1/8 in. width
- No. 2 Philips screwdriver
- 10 mm Allen wrench
- Adjustable wrench

3.2 Locations

Use the information in Section 3.2.1 "Field of View" and Section 3.2.2 "Environmental Factors" to select the best location to install the device.

3.2.1 Field of View

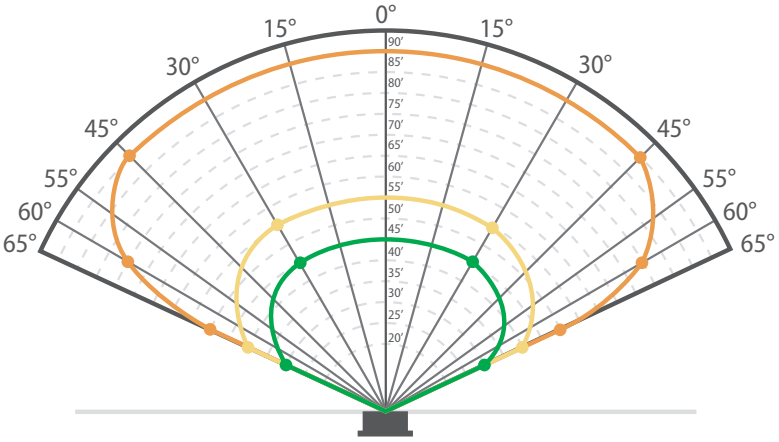

Gas Performance: HEPTANE

Horizontal	High	Med	Low
0°	90′	55′	45′
± 15°			
30°		55′	45′
- 30°		55′	45′
45°	90′		
- 45°	90′		
60°	75′		
- 60°	75′		
65°	50′	40′	30′
- 65°	50′	40′	30′

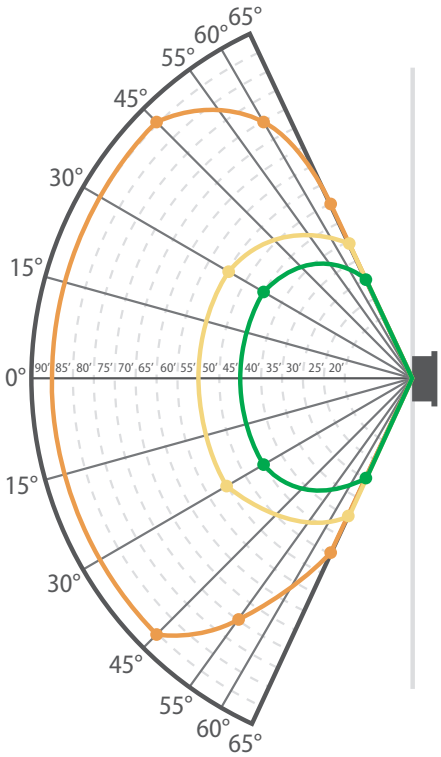

Gas Performance: HEPTANE

Horizontal	High	Med	Low
0°	90′	55′	45′
± 15°			
30°		55′	45′
- 30°		55′	45′
45°	90′		
- 45°	90′		
60°	75′		
- 60°	60′		
65°	50′	40′	30′
- 65°	50′	40′	30′

Fig. 3 Heptane Field of View

US

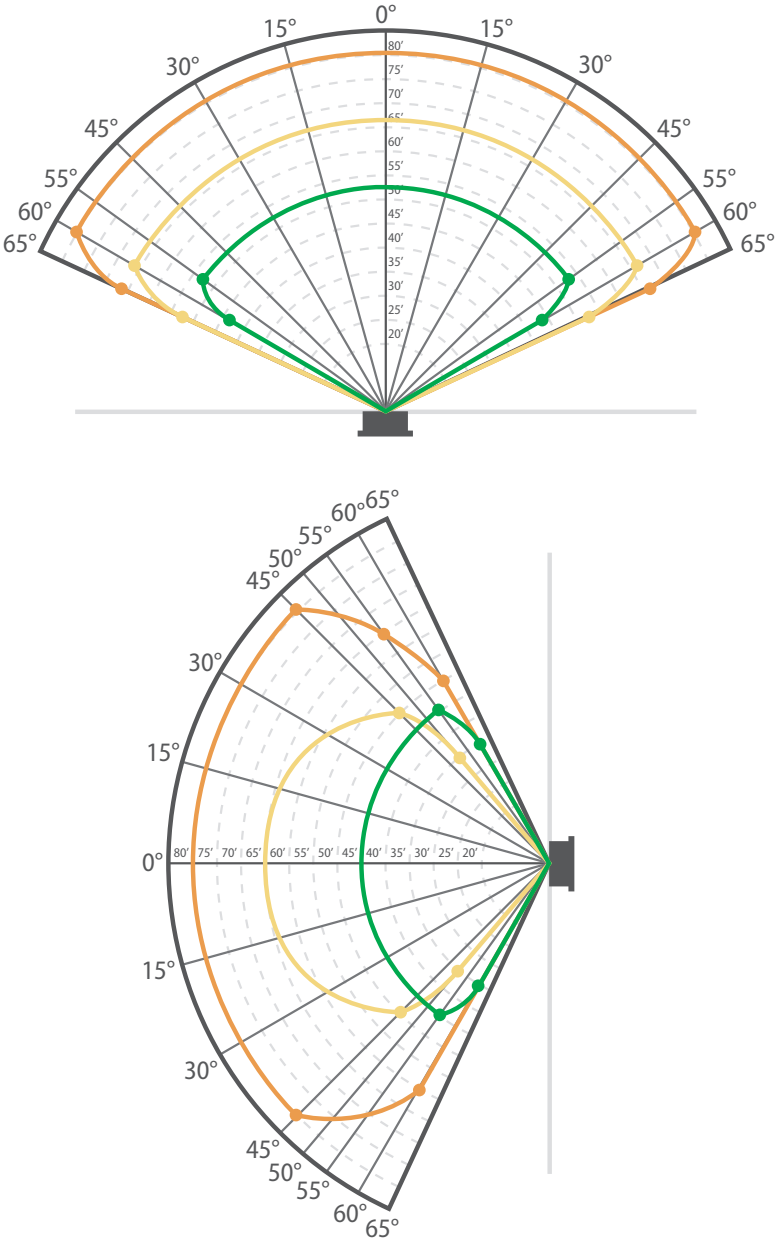

Fig. 4 Methane Field of View

Gas Performance: METHANE

Horizontal	High	Med	Low
0°	80′	60′	45′
± 15°			
30°			
- 30°			
40°			
- 40°			
45°	80′		
- 45°	80′		
55°	65′	50′	45′
- 55°	65′	50′	45′
60°		40′	35′
- 60°		35′	35′

Gas Performance: METHANE

Vertical	High	Med	Low
0°	80′	60′	45′
± 15°			
30°			
– 30°			
40°			
– 40°			
45°	80′	50′	
– 45°	80′	50′	
50°		35′	
– 50°		35′	
55°	65′		45′
– 55°	65′		45′
60°	50′		35′
– 60°	60′		35′

US

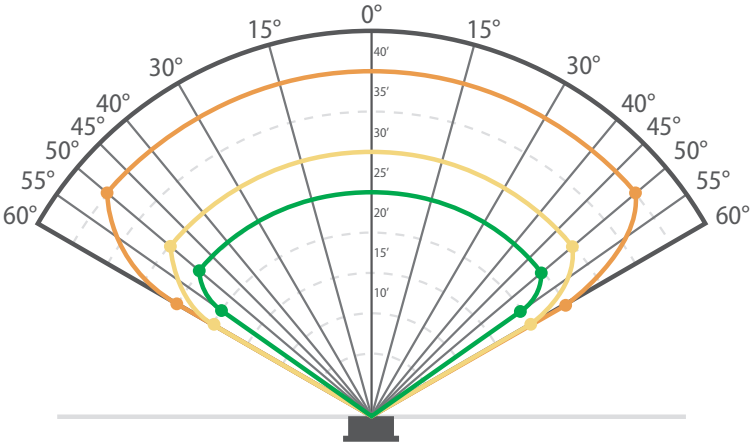

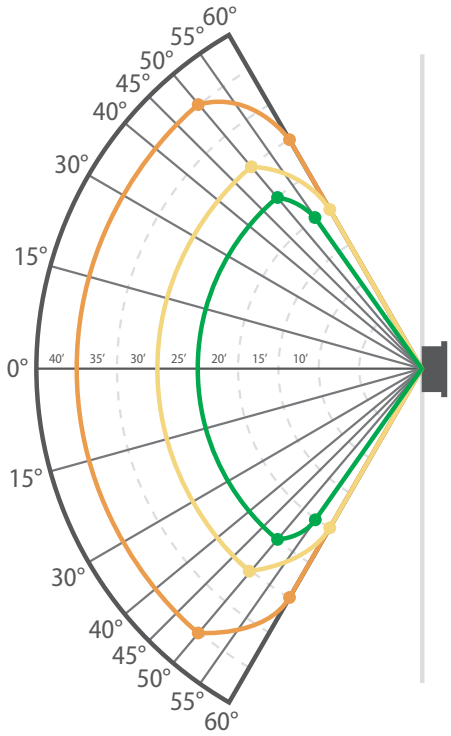

Fig. 5 Methanol Field of View

Gas Performance: METHANOL

Horizontal	High	Med	Low
0°	40′	30′	25′
± 15°			
30°			
– 30°			
± 40°			
45°			
– 45°			
50°	40′	30′	25′
– 50°	40′	30′	25′
55°			20′
– 55°			20′
60°	25′	20′	
– 60°	25′	20′	

Gas Performance: METHANOL

Horizontal	High	Med	Low
0°	40′	30′	25′
± 15°			
30°			
– 30°			
40°			
– 40°			
50°	40′	30′	25′
– 50°	40′	30′	25′
55°			20′
– 55°			20′
60°	30′	20′	
– 60°	30′	20′	

US

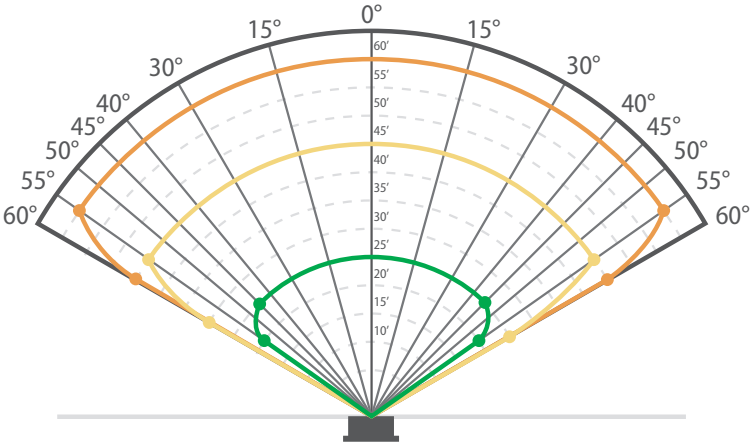

Gas Performance: PROPANE

Horizontal	High	Med	Low
0°	60′	45′	25′
± 15°			
30°			
– 30°			
40°			
– 40°			
45°			25′
– 45°			25′
55°	60′	45′	20′
– 55°	60′	45′	20′
60°	45′	25′	
– 60°	45′	30′	

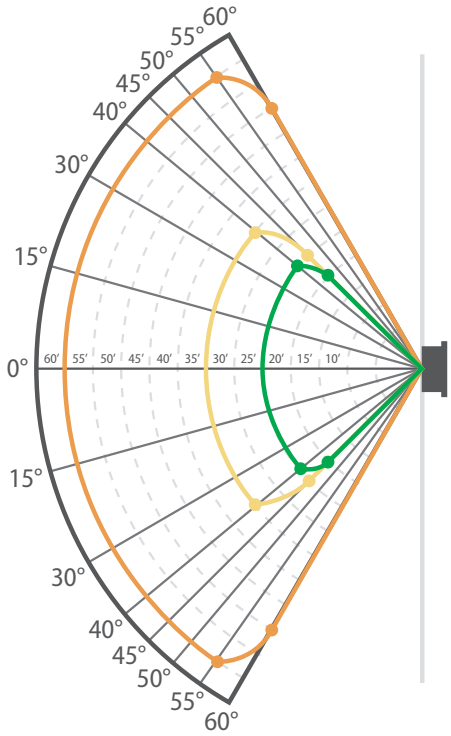

Gas Performance: PROPANE

Horizontal	High	Med	Low
0°	60′	45′	25′
± 15°			
30°			
– 30°			
40°		35′	25′
– 40°		35′	25′
45°		25′	20′
– 45°		25′	20′
55°	60′		
– 55°	60′		
60°	50′		
– 60°	50′		

Fig. 6 Propane Field of View

US

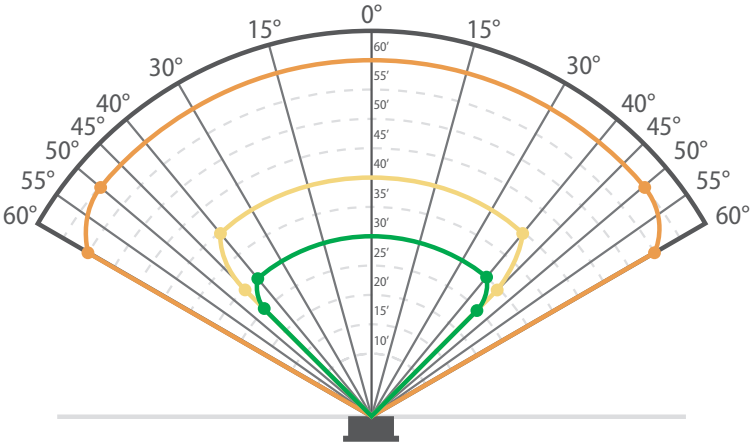

Gas Performance: ETHANE

Horizontal	High	Med	Low
0°	60′	40′	30′
± 15°			
30°			
– 30°			
40°		40′	30′
– 40°		40′	30′
45°		30′	25′
– 45°		30′	25′
50°	60′		
– 50°	60′		
60°	55′		
– 60°	55′		

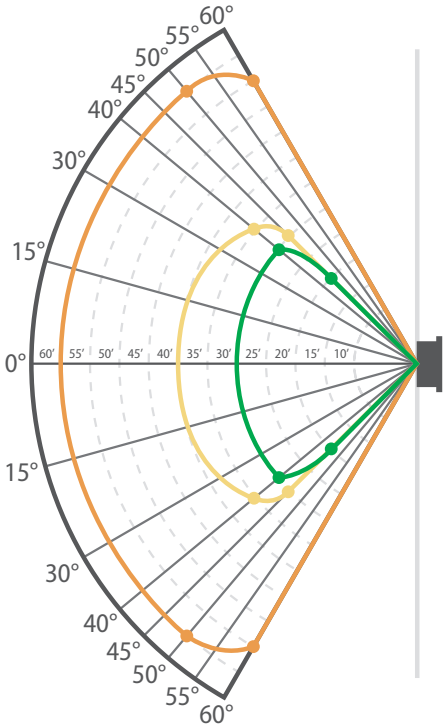

Gas Performance: ETHANE

Horizontal	High	Med	Low
0°	60′	40′	30′
± 15°			
30°			
– 30°			
40°		40′	30′
– 40°		40′	30′
45°		30′	25′
– 45°		30′	25′
50°	60′		
– 50°	60′		
60°	55′		
– 60°	55′		

Fig. 7 Ethane Field of View

US

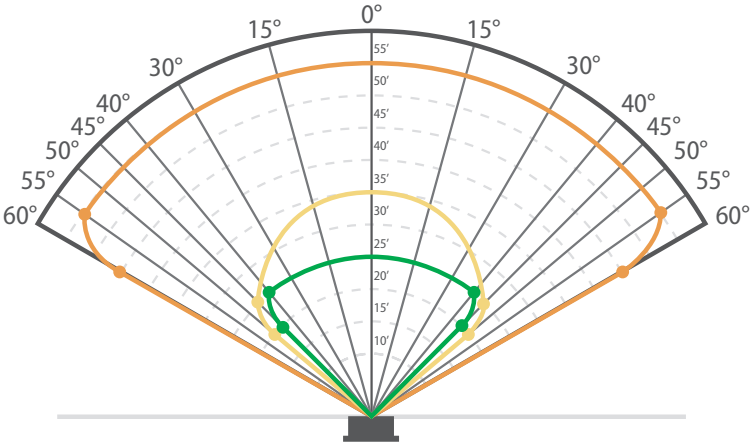

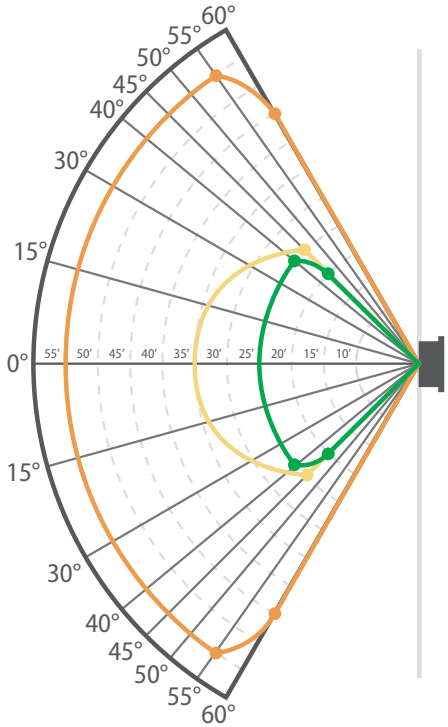

Fig. 8 Butane Field of View

Gas Performance: BUTANE

Horizontal	High	Med	Low
0°	55′	35′	25′
± 15°			
30°			
– 30°			
40°			25′
– 40°			25′
45°		25′	20′
– 45°		25′	20′
50°		20′	
– 50°		20′	
55°	55′		
– 55°	55′		
60°	45′		
– 60°	45′		

Gas Performance: BUTANE

Horizontal	High	Med	Low
0°	55′	35′	25′
± 15°			
30°			
– 30°			
40°			25′
– 40°			25′
45°		25′	20′
– 45°		25′	20′
55°	55′		
– 55°	55′		
60°	45′		
– 60°	45′		

US

3.2.2 Environmental Factors

WARNING!

Do NOT install the device in an area where temperatures will be more than 185°F (85°C).

Failure to obey this warning can result in serious injury or death.

The operating temperature range for the device is -67°F to 185°F (-55°C to 85°C). For outdoor installations or other areas that are exposed to intense, direct solar radiation, the device may reach temperatures well above specifications.

Make sure that the device is in an area where ice, dirt, or debris cannot collect on the optical window. If ice, dirt, or debris collects on the optical window, a COPM Fault occurs.

To maintain the device enclosure's IP66/IP67 and Type 6P ingress ratings, use a nonhardening sealant to install stopping plugs on conduit/cable entries that are not used.

3.3 Mounting

Use the mounting bracket (PN 71370-1) and hardware to install the device on a wall, pole, or other surface. The design of the mounting bracket lets you adjust optical alignment while keeping the device in a fixed position.

To attach the mounting bracket to drywall, install at least two fasteners to the stud behind the drywall to give support for the weight of the device. The recommended fastener is a 3-in. #12 screw.

Use the dimensions shown in Figures 10 through 14 to install the device correctly. Make sure that the device:

- Is in a location where personnel and objects cannot cause a blockage of the field of view
- Is in a location that is convenient for visual inspection and cleaning
- Is in a location where ice, dirt, or debris cannot collect on the optical window
- Points downward to prevent dust and moisture from collecting on the optical window

General Monitors does not recommend the use of cable shoes or crimps on any junction box or housing wiring terminals. Poor crimping can cause a bad connection when temperature variations occur.

US

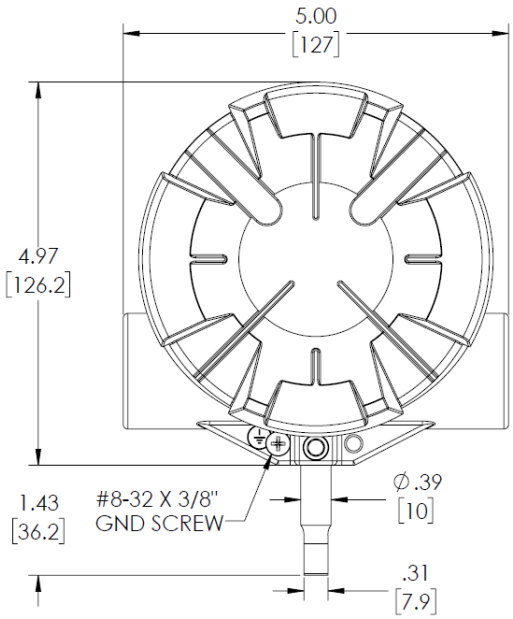

Fig. 9 FL500 Outline Drawing, Front View

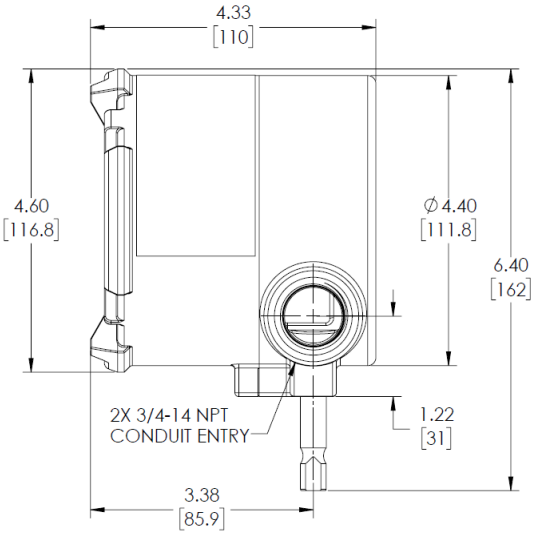

Fig. 10 FL500 Outline Drawing, Side View

US

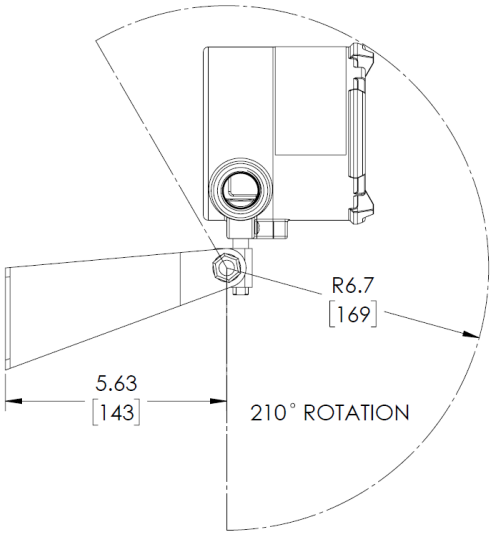

Fig. 11 FL500 and Mounting Bracket, Side View

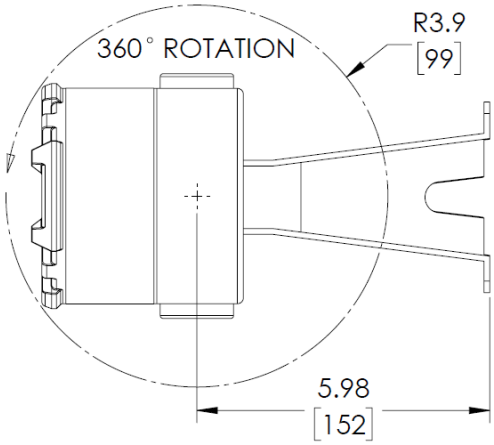

Fig. 12 FL500 and Mounting Bracket, Top View

US

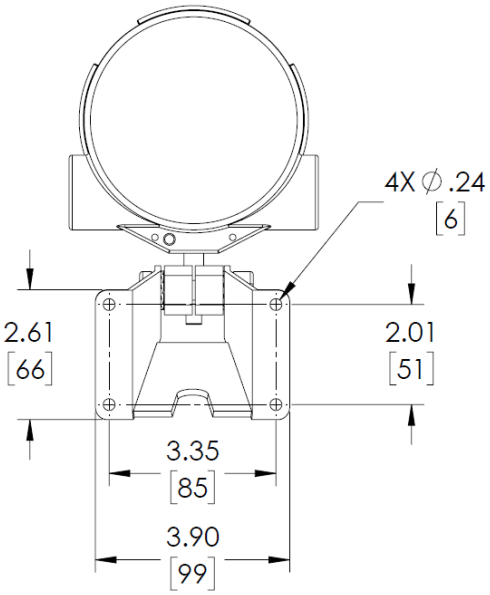

Fig. 13 FL500 and Mounting Bracket, Rear View

3.4 Wiring

WARNING!

- An approved electrician must do electrical wiring.
- All wiring must satisfy the requirements of the applicable NEC, CEC, and local electrical safety codes.
- Install a conduit seal within 18 in. (46 cm) of the device enclosure.
- Make sure that all wiring is applicable for use at an ambient temperature of 199.6ºF (93.1°C).
- Before installing the wiring for the device, disconnect the power source.
- Read all electrical warnings and wiring requirements before connecting power to the device.
- The device wiring can be damaged by electrostatic discharge (ESD). When you do work with the device wiring, be careful to touch only the connection points. The warranty does not supply coverage for components that are damaged by ESD.
- Do NOT install wiring in a hazardous atmosphere. Otherwise, electrical shock or ignition can occur. Failure to obey these warnings can result in serious injury or death.

Install all wiring connections through the base entries to the terminal block (TB). The terminal block accepts 14 - 22 AWG (2.1 - 0.3 mm^2) stranded or solid-core wire.

US

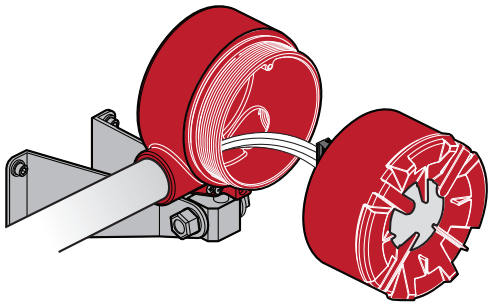

Fig. 14 FL500 Housing and Base

Remove the insulation from each wire to 0.25 in. (0.64 cm).

Use the correct cables for the ambient temperature where the device is installed.

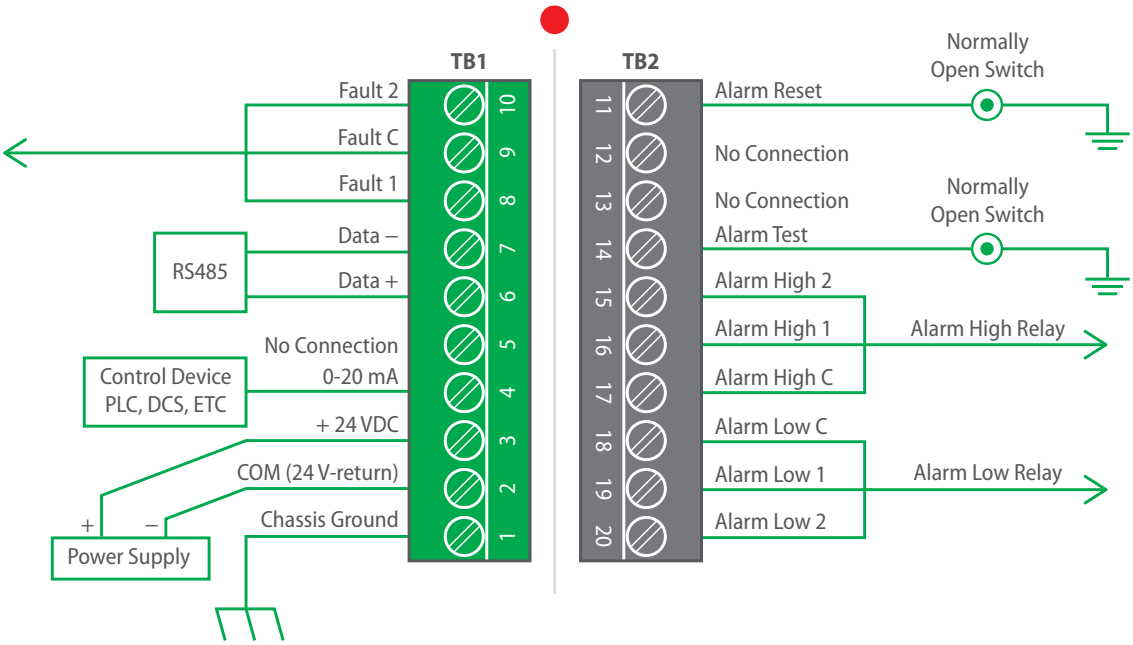

Fig. 15 Wiring Diagram

Protection Circuits for Relay Contacts

WARNING!

Protect relay contacts from transient and over-voltage conditions. Attach a clamp to all inductive loads (bells, buzzers, relays) on dry relay contacts as shown. Inductive loads that do not have a clamp attached can cause voltage spikes of more than 1000 Volts. Voltage spikes of this magnitude can cause false alarms and damage to the contacts.

Failure to obey this warning can result in serious injury or death.

(1) To connect the wire to the terminal block, install the conductor in the connection space as shown.

(2) Use a flat-blade screwdriver to tighten the related screw terminal.

US

3.5 Terminal Connections

There are 20 terminal connections. The following sections give descriptions and specifications for each connection.

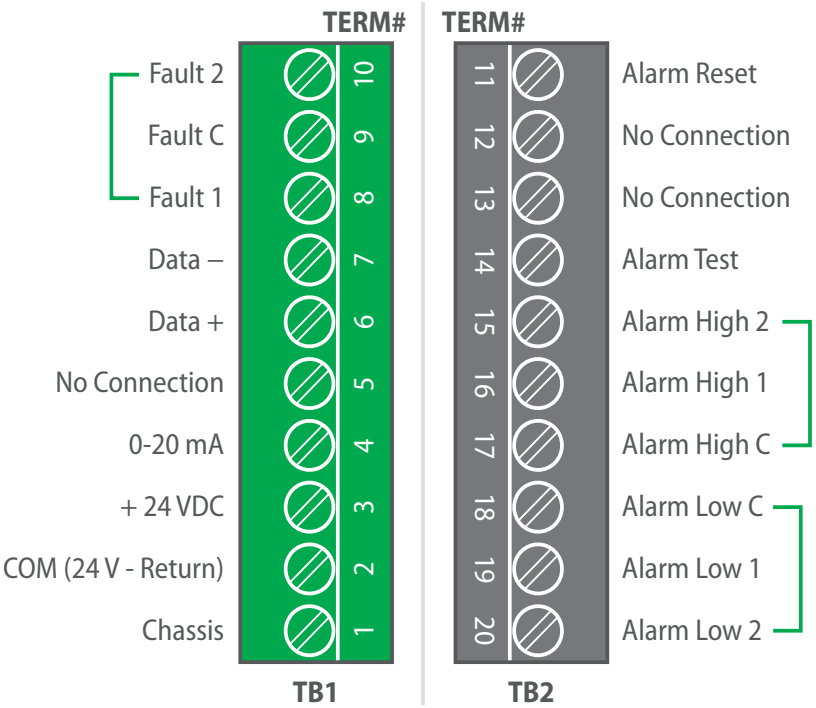

Fig. 16 Field Terminations

3.5.1 TB2, Alarm High Relay Connection

The output for the SPDT Alarm High relay has a time delay that can be set for 2, 4, 8, or 10 seconds. Alarm High output can be normally energized or normally de-energized, latching or non-latching.

All options can be set through Modbus, HART, or the DIP switch. Refer to Section 4.2 "Changing Device Settings" for instructions.

TB2 Position	Alarm High Relay	Relay Contact (De-Energized)	Relay Contact (Energized)
7	C	Common	Common
6	1	Normally Closed	Normally Open
5	2	Normally Open	Normally Closed

US

3.5.2 TB2, Alarm Low Relay Connection

The output for the SPDT Alarm Low relay is immediate. Alarm Low output can be normally energized or normally de-energized, latching or non-latching.

All options can be set through Modbus, HART, or the DIP switch. Refer to Section 4.2 "Changing Device Settings" for instructions.

TB2 Position	Alarm Low Relay	Relay Contact (De-Energized)	Relay Contact (Energized)
8	C	Common	Common
9	1	Normally Closed	Normally Open
10	2	Normally Open	Normally Closed

3.5.3 TB1, Fault Relay Connection

The standard configuration for the SPDT Fault relay is normally energized and non-latching. This configuration cannot be changed.

The Fault relay is activated during the time-out function, a low-power or loss-of-power condition, and a COPM Fault. For the duration of these conditions, the Fault relay de-energizes and the signal for analog output decreases to 0 mA (2 mA for a COPM Fault).

TB1 Position	Fault Relay	Relay Contact (De-Energized)	Relay Contact (Energized)
9	C	C	C
8	1	Normally Closed	Normally Open
10	2	Normally Open	Normally Closed

3.5.4 Alarm Reset Switch

Use the Alarm Reset switch to set latched Alarm High or Alarm Low output that is no longer applicable back to its initial condition.

Do the following:

(1) Connect one contact of a normally open momentary switch to TB1 Terminal 3.

(2) Connect the other contact to COM (device Common).

(3) Push and release the Alarm Reset switch.

Position	Function
TB2 POS 11	RESET
TB2 POS 14	TEST

Multiple devices cannot be put in a daisy-chain configuration to use the Alarm Reset switch. Each latching Alarm Low and Alarm High output must be reset manually.

US

3.5.5 Analog Output, Modbus and HART

The 0 - 20 mA output is equivalent to the following analog output:

Condition	Modbus	HART (Normal)	HART (Special)
Startup	0 - 0.2 mA	3.5 ±0.2 mA	1.25 ±0.2 mA
Fault	0 - 0.2 mA	3.5 ±0.2 mA	1.25 ±0.2 mA
COPM Fault	2.0 ±0.2 mA	3.5 ±0.2 mA	2.0 ±0.2 mA
Ready	4.05 ±0.2 mA	4.05 ±0.2 mA	4.05 ±0.2 mA
IR	8.0 ±0.2 mA	8.0 ±0.2 mA	8.0 ±0.2 mA
UV	12.0 ±0.2 mA	12.0 ±0.2 mA	12.0 ±0.2 mA
Alarm Low	16.0 ±0.2 mA	16.0 ±0.2 mA	16.0 ±0.2 mA
Alarm High	20.0 ±0.2 mA	20.0 ±0.2 mA	20.0 ±0.2 mA

The maximum analog output load, including wiring, is 600 ohms.

In normal HART mode, the current output does not go below 3.5 mA. Modbus sends 2.0 mA output for COPM (as if HART was not there) to make a constant Modbus program available. The digital HART protocol sends the actual current output. When the Alarm High or Alarm Low relays are latched, the highest output current is also latched. The output current goes back to 4.0 mA when the Alarm Reset switch relay is activated.

The special HART mode lets the current decrease to 1.25 mA. The HART protocol continues to operate. Use the special HART mode with products that require 2 mA output for COPM, 1.5 mA output when the device is offline, and 0 mA output for a Fault condition.

The Modbus protocol is used to configure the device or to find the status of the device.

For information about Modbus, refer to the FL500 Modbus Communication Operating Manual (PN 10193214).

For information about HART, refer to the FL500 HART Communication Operating Manual (PN 10193215).

TB1 Position	Connection
6	DATA +
7	DATA -

US

3.6 Cable Lengths

Use the following cable lengths (maximum 50-ohm loop) for interfaces with impedance devices that have 250-ohm input.

Cable AWG	Run (ft)	Cable (mm^2)	Run (m)
14	9000	2.50	2750
16	5800	1.50	1770
18	3800	1.00	1160
20	2400	0.75	730
22	1700	0.50	520

Use the following cable lengths (maximum 20-ohm loop) for a 24 Vdc power supply.

Cable AWG	Run (ft)	Cable (mm^2)	Run (m)
14	6588	2.08	2013
16	4146	1.31	1266
18	2608	0.823	796
20	1642	0.519	501
22	1055	0.33	321

3.7 Power Supply

The voltage range for the power supply is 20 - 36 Vdc at the device. Low voltage occurs at approximately 18.5 Vdc.

TB1 Position	Connection
3	24 Vdc
2	COM

3.8 Chassis Ground

Use this connection to ground the device when you do any work with the wiring. General Monitors recommends that the chassis be grounded at all times.

TB1 Position	Connection
1	CHAS GND

3.9 Fire Cards or Panels

General Monitors factory-fits end-of-life (EOL) and Alarm High resistors for devices that are wired together to do monitoring through standard fire cards.

When the FL500 is used with a General Monitors Model IN042 card, the Alarm High resistor is set to 470 ohm and the EOL resistor is set to 5.6K. The EOL resistor is onboard the Model IN042 card and can be selected through the DIP switch.

European Union (EU) approved applications: Make sure that interconnecting cables have an overall screen, or screen and armor. Cables BS5308 Part 2, Type 2, or equivalent are approved for use. To make a positive electrical connection, make sure that the cable armor connects to an applicable cable gland at the device.

US

3.10 Cable Termination in a Nonhazardous Area

WARNING!

Do NOT connect or disconnect equipment when power is supplied to the device. Doing so can result in serious damage to the equipment. The warranty does not supply coverage for equipment that is damaged in this way.

Failure to obey this warning can result in serious injury or death.

Connect the cable **armor** to **safety earth** in a nonhazardous area.

Connect the cable **screen** (drain wire) to **instrument earth** in a nonhazardous area.

Connect the power supply **OV return** to **instrument earth** in a nonhazardous area.

Keep interconnecting cables isolated from the power cable and other noisy cables, such as cables for radio transmitters, welders, switch mode power supplies, inverters, battery chargers, ignition systems, generators, switch gear, arc lights, and other high-frequency or high-power switching process equipment. Keep a separation of at least 3 ft (1 m) between instrument and other cables. An increased separation is necessary for long, parallel cable runs. Do not put instrument cable trenches close to lightning conductor earthing pits.

4 Operation

WARNING!

- Make sure that there is no physical blockage from permanent objects such as structures and equipment or temporary objects such as personnel and vehicles in the sensor's field of view. If there is physical blockage in the sensor's field of view, the device cannot accurately monitor the area for flame.
- Make sure that there is no ice, dirt, or debris on the optical window. Blockage of the optical window can result in a Fault condition.
- During a Fault condition, the device does not monitor the area for flame.
  Failure to obey these warnings can result in serious injury or death.

4.1 Start-Up

Before you supply power to the device, do the following:

- Replace the red dust cap with an applicable cable gland.
- Disconnect external devices such as automatic extinguishing fire suppression systems to prevent activation.
- Make sure that the settings for the DIP switch are in the correct configuration. Refer to Section 4.2.1 "Using the DIP Switch" for instructions.
- Make sure that the device is mounted and wired correctly.
- Make sure that there is no blockage of the field of view for each device.
- Make sure that the optical window and reflectors are clean. Refer to Section 5.2 "Cleaning the Optical Window" for cleaning instructions.
- Make sure that the power supply is connected correctly.

Apply power to the device. Each device starts a self-test start-up sequence. For the first 10 seconds, the device sends 0 mA output, the Fault relay stays de-energized, and the green, yellow, and red LEDs flash. After this 10-second period, the device sends 4 mA output, the Fault relay is energized, the red LED goes off, and the green LED comes on and flashes every 5 seconds.

After the start-up sequence is complete, do a sensitivity check. Refer to Section 4.3 "Sensitivity Check" for instructions.

4.2 Changing Device Settings

All device settings can be changed through Modbus, HART, or the DIP switch. Settings made through Modbus and HART override settings made through the DIP switch.

4.2.1 Using the DIP Switch

To change device settings through the DIP switch, do the following:

(1) Use a flat-blade screwdriver to remove the screws that attach the detector head to the base assembly.

(2) Find the DIP switch.

(3) Make the applicable switch assignments.

(4) Cycle power to the device.

US

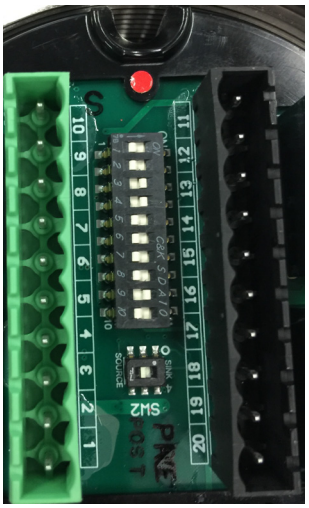

Fig. 17 DIP Switch Location

On the DIP switch, the nomenclature "ON/CLOSED" is used when the switch is pushed in on the side labeled "ON" or "CLOSED" (opposite the side labeled "OPEN"). The nomenclature "OFF/OPEN" is used when the switch is pushed in on the side with the number related to the switch position or the side labeled "OPEN".

The time delay is the amount of time an Alarm Low condition continues before an Alarm High condition occurs.

	Option									
Position	**1**	**2**	**3**	**4**	**5**	**6**	**7**	**8**	**9**	**10**
High Sensitivity	OFF	OFF	-	-	-	-	-	-	-	-
Medium Sensitivity	ON	OFF	-	-	-	-	-	-	-	-
Low Sensitivity	OFF	ON	-	-	-	-	-	-	-	-
2-second Alarm High Time Delay	-	-	OFF	ON	-	-	-	-	-	-
4-second Alarm High Time Delay	-	-	OFF	OFF	-	-	-	-	-	-
8-second Alarm High Time Delay	-	-	ON	OFF	-	-	-	-	-	-
10-second Alarm High Time Delay	-	-	ON	ON	-	-	-	-	-	-
Alarm High Non-Latching	-	-	-	-	OFF	-	-	-	-	-
Alarm High Latching	-	-	-	-	ON	-	-	-	-	-
Alarm Low Non-Latching	-	-	-	-	-	OFF	-	-	-	-
Alarm Low Latching	-	-	-	-	-	ON	-	-	-	-
Alarm High Normal Energized	-	-	-	-	-	-	ON	-	-	-
Alarm High Normal De-Energized	-	-	-	-	-	-	OFF	-	-	-
Alarm Low Normal Energized	-	-	-	-	-	-	-	ON	-	-
Alarm Low Normal De-Energized	-	-	-	-	-	-	-	OFF	-	-
Alternate LED	-	-	-	-	-	-	-	-	-	ON
HART Enabled	-	-	-	-	-	-	-	-	ON	-

US

4.2.2 Using Modbus or HART

To use the HART protocol, it is necessary to select the applicable current (1.25 mA or 3.5 mA). The factory default setting is 3.5 - 20 mA. This setting can only be changed through HART or Modbus.

Settings for Modbus and HART can be changed through the DIP switch.

For information about changing device settings through Modbus, refer to the FL500 Modbus Communication Operating Manual (PN 10193214).

For information about changing device settings through HART, refer to the FL500 HART Communication Operating Manual (PN 10193215).

4.3 Sensitivity Check

Use the TL105 Test Lamp or the Alarm Test feature to make sure that each device operates correctly.

If the device does not operate correctly, refer to Section 7 "Troubleshooting" for instructions.

4.3.1 TL105 Test Lamp

The TL105 test lamp is a battery operated, rechargeable test source used to make sure that operation of the device is correct. The test lamp has a high-energy broadband radiation source that emits sufficient energy in both the UV and IR spectra to activate the UV and IR detectors. To simulate a fire, the TL105 test lamp automatically flashes at the correct rate for different models. When fully charged, the internal batteries operate continuously for 30 minutes. When the battery charge goes below the level necessary to supply the correct intensity, an internal low-voltage circuit stops operation of the test lamp until the batteries are recharged. For recharging instructions, refer to the TL105 Instruction Manual (PN MANTL105).

Fig. 18 TL105 Test Lamp

(1) Make sure that the batteries are fully charged and the rotary switch is set at position 4 (FL4000 position).

(2) Stand 15 - 20 ft (5 - 6 m) away from the device.

(3) Point the TL105 test lamp directly at the front of the device.

(4) Shake the test lamp from side to side or up and down. Motion increases the simulation of flames flickering and increases the response of the device to the test lamp.

If device operation is correct, after a few flashes of the test lamp, an Alarm Low condition occurs.

If the test lamp stays pointed at the device for the period of the time-delay setting, an Alarm High condition occurs.

To conserve the battery charge, operate the test lamp only as long as necessary to do a test of each device.

US

4.3.2 Alarm Test Feature

To use the Alarm Test feature, do the following:

(1) Connect one contact of a normally open, momentary switch to TB1 Terminal 4.

(2) Connect the other contact to TB1 Terminals 9 and 10 (COM).

(3) Activate the switch for the period set for the time delay (2 - 10 seconds).

- If the device senses the source, it immediately sends Alarm Low output, then the time-delayed Alarm High ouput. After 1 to 8 seconds, the device resets the non-latching Alarm Low and Alarm High conditions. Latching Alarm Low and Alarm High conditions stay latched until they are reset manually. Refer to Section 3.5.4 "Alarm Reset Switch" for instructions.
- If the device does not sense the source, it sends Fault output and does the test again every 10 seconds.

The Alarm Test feature can be used through Modbus and HART.

Multiple devices cannot be put in a daisy-chain configuration to do testing for Alarm High output.

5 Maintenance

WARNING!

- Repair or alteration of the device beyond the scope of the maintenance instructions in this manual or by anyone other than General Monitors or General Monitors-approved service personnel can cause incorrect operation of the device and put persons who use this device for their safety at risk of serious injury or death.
- The device has components that can be damaged by electrostatic discharge (ESD). When you do work with the device wiring, be careful to touch only the connection points. The warranty does not supply coverage for components that are damaged by ESD.
  Failure to obey these warnings can result in serious injury or death.

General Monitors recommends that maintenance intervals be set through a documented procedure that includes a maintenance log kept by plant personnel or third-party testing services.

5.1 Regular Maintenance

WARNING!

Use ONLY a damp cloth to clean the device. Otherwise, electrical shock or ignition from ESD can occur.

Failure to obey this warning can result in serious injury or death.

Clean the optical window every 30 days at a minimum. Refer to Section 5.2 "Cleaning the Optical Window" for instructions. Do sensitivity checks regularly. Refer to Section 4.3 "Sensitivity Check" for instructions.

Examine, clean the optical window, and do sensitivity checks more frequently for devices that are installed in dirty areas.

5.2 Cleaning the Optical Window

WARNING!

Use ONLY Industrial Strength Windex® with Ammonia D (General Monitors PN 10272-1) to clean the optical window. The optical window material is sapphire, not glass. Using any other commercial glass cleaner will cause damage to the optical window. The warranty does not supply coverage for optical windows that are damaged in this way.

Failure to obey this warning can result in serious injury or death.

Remove debris and film buildup on the optical window and reflectors regularly to make sure that the device has the correct sensitivity and to prevent COPM Faults. General Monitors recommends that you clean the optical window and reflectors every 30 days at a minimum. Clean the optical window and reflectors more frequently for devices that are installed in dirty areas.

(1) Use a clean, soft, lint-free cloth, tissue, or cotton swab soaked with Industrial Strength Windex with Ammonia D to clean the optical window.

(2) Use a clean, dry, cloth to rub the optical window until it is clean. Do NOT touch the lens with your fingers.

(3) Let the optical window air-dry fully.

5.3 Annual Maintenance

Make sure that all wiring and terminal connections are connected correctly.

Make sure that the mounting for all integral safety equipment, including but not limited to following components, is stable:

- Power supplies
- Control modules
- Field detection devices
- Signaling devices
- Accessories connected to field and signaling devices

6 Storage

WARNING!

Keep the device safe from vibration and mechanical shock, which can cause damage.

Failure to obey this warning can result in serious injury or death.

Keep the device in a clean area with an ambient temperature of -40°F to 185°F (-40°C to 85°C) and a humidity range of 0% to 95% RH noncondensing.

For extended storage, do the following:

(1) If possible, keep the device in the mold as shipped by the manufacturer.

(2) Install the red dust caps in the cable entry holes.

(3) Seal the device and a desiccant in a plastic bag.

(4) Seal the plastic bag inside another plastic bag.

7 Troubleshooting

WARNING!

Repair or alteration of the device beyond the scope of the maintenance instructions in this manual or by anyone other than General Monitors or General Monitors-approved service personnel can cause incorrect operation of the device and put persons who use this device for their safety at risk of serious injury or death.

During a Fault condition, the device does not monitor the area for flame.

7.1 Troubleshooting Table

The troubleshooting table gives information about common faults that occur during commissioning and operation. These common faults can be repaired by a competent operator.

Before you do the following corrective actions, inhibit or disconnect the external alarm wiring to prevent an accidental Alarm High condition.

Problem	Possible Cause	Corrective Action
No output signal and all LEDs are off	No dc power to the device	Make sure that 24 Vdc is applied with the correct polarity.
2 mA signal, green LED is off, yellow LED is blinking	Device is in COPM Fault	Clean the optical window and reflectors. Refer to Section 5.2 "Cleaning the Optical Window" for instructions.
0 mA, 1.25 mA, or 3.5 mA signal, and yellow LED is on	Low supply voltage or other fault	Make sure that the supply voltage is ≥20 Vdc at the device. If it is, cycle the power to see if the fault is removed.
Constant 8 mA signal with no known radiation to device	Background IR radiation at device	Put a cover over the optical window for 10 seconds. If the device senses background IR, and the analog output still shows 8 mA, contact technical support for more trouble-shooting.
Constant 12 mA signal with no known radiation to device	Background UV radiation at device	Put a cover over the UV part of the optical window for 10 seconds. If the device senses background UV, and the analog output still shows 12 mA, contact technical support for more troubleshooting.
Constant 16 mA or 20 mA signal (Alarm Low or Alarm High) with no known radiation at device	Background UV radiation at device	Put a cover over the optical window for 10 seconds. If the analog output still shows 16 mA or 20 mA, contact tech-nical support for more trouble-shooting.

US

If the corrective actions recommended in the troubleshooting table do not correct operation of the device, return the device to General Monitors for repair.

7.2 Returning the Device for Repairs

Use the following contact information to return a device to General Monitors for repair. Include a detailed written description of the problem.

UNITED STATES

26776 Simpatica Circle
Lake Forest, CA 92630

Phone: +1-949-581-4464
Email: info.gm@msasafety.com

IRELAND

Ballybrit Business Park
Galway
Republic of Ireland

Phone: +353-91-751175
Email: info.gmil@msasafety.com

MIDDLE EAST

P.O. Box 54910
Dubai Airport Freezone
United Arab Emirates

Phone: +971-4-294-3640
Email: gmdubai.main@msasafety.com

SINGAPORE

35 Marsiling Industrial Estate, Road 3
#04-01
Singapore 739257

Phone: +65-6748-3488

Additional locations are available at www.MSAsafety.com.

7.3 Removing the Device from Service Permanently

EU member states must discard devices in accordance with the Waste Electrical and Electronic Equipment (WEEE) Directive. All other countries or states must discard devices in accordance with existing federal, state, and local environmental control regulations.

7.4 References and Other Sources of Help

Look for documentation, white papers, and product literature for our complete line of safety products at http://www.MSAsafety.com/detection.

For more information about the use and performance standards for the device, refer to the following publications:

- BS EN 54-10:2002, Fire detection and fire alarm systems - Flame detectors - Point detectors. British Standards Institute, London, United Kingdom, 2002.
- BS EN 50130-4, Electromagnetic compatibility. Product family standard: Immunity requirements for components of fire, intruder, hold up, CCTV, access control and social alarm systems. British Standards Institute, London, United Kingdom, 2011.
- BS EN 61000-6-4:2007+A1:2011, Electromagnetic compatibility (EMC). Generic standards. Emission standard for industrial environments. British Standards Institute, London, United Kingdom, 2007.

8 Specifications

8.1 System Specifications

Application	UV/IR Flame Detection		
Device location	Class I, Division 1, Groups A*, B, C, and D Class II, Division 1, Groups E, F, and G Class III Ex db IIC T5 Gb Ex tb IIIC T100°C Db II 2 G D -50°C to 85°C under FM, -55°C to 85°C under CSA/ATEX/IECEx		
Environmental ratings	Type 6P, IP66/IP67		
UV Detector pass band	185 - 260 nanometers		
IR Detector center wave-length	4.35 mm		
Typical alarm activation response times	**Fuel**	**Distance (ft)**	**Response Time (s)**
	n-Heptane	90	6
		60	<3
	Methane	80	<10
	Methanol	40	12
	Propane	60	<7
	Ethane	60	<3
	Butane	55	<3
Zeta value	Zeta = -0.001 The margin of error in the range measurement is estimated at ±5 ft (±1.5 m) due to wind conditions and flame turbulence.		
Field of view	Refer to Section 3.2.1 "Field of View" for information.		

* Applicable to FM approvals only.

Notes:

Response times and field of view data were derived by testing the device with a 1 ft^2 heptane fire. One cup of heptane on top of a 1-in. layer of water was ignited for each test. These are typical values. The variation of each fire can cause different results.

The field of view as determined per the requirements of EN 54-10 is limited to ±25 degrees due to the nature of the test requirements for the Directional Dependence test. This result is based on indoor bench top testing using a Bunsen burner as the fire source as opposed to outdoor flame testing that was used to determine the field of view plots in Section 3.2.1 "Field of View".

US

8.2 Mechanical Specifications

Enclosure material	316 Stainless Steel
Color	Red
Finish	TGIC polyester powder coat
Height	6.4 in. (16.2 cm)
Width	5.0 in. (12.7 cm)
Depth	4.3 in. (11.0 cm)
Weight	9.4 lb (4.3 kg)
Cable Entry	2 x ¾ in. NPT (M25 adapters included for some configurations)
Earth Terminals	8-32 x 3/8 Philips pan-head screw, stainless steel, zinc-plated, green dye; external stainless steel tooth lock washer included. Applicable for connection of 4 mm^2 or smaller.

8.3 Electrical Specifications

Nominal supply voltage	24 Vdc
Supply voltage range	20 to 36 Vdc (measured at device)
Maximum supply current	200 mA during COPM only
Typical current	80 to 150 mA
Maximum output signal load	600 ohms
Output signal range	0 to 20 mA *
Fault signal	0 to 0.2 mA *
COPM fault signal	2.0 ±0.2 mA *
Ready signal	4.0 ±0.2 mA
IR only signal	8.0 ±0.2 mA
UV only signal	12.0 ±0.2 mA
Alarm Low signal	16.0 ±0.2 mA
Alarm High signal	20.0 ±0.2 mA
Relay contact ratings	North American Approved Applications: SPDT, 5A @ 250 Vac, or 5A @ 30 Vdc resistive max. European Union (EU) Approved Applications: SPDT, 5A 30V RMS/42.4V Peak, or 5A @ 30 Vdc resistive max.
RS-485 output	Modbus RTU 128 devices in series max. (247 devices with repeaters) Baud rate: 2400, 4800, 9600, or 19200 bps
HART	Fully HART 7 FieldComm compliant. Refer to the FL500 HART Communication Operating Manual (PN 10193215).
HART impedance	RX = 50 K CX = 5 nF
RFI/EMI protection	Complies with BS EN 50130-4 and BS EN 61000-6-4
Status indicator	Three LEDs identify status, fault, and alarm conditions

8.4 Environmental Specifications

Operating temperature range	-67°F to 185°F (-55°C to 85°C)
Storage temperature range	-40°F to 185°F (-40°C to 85°C)
Humidity range	0% to 95% RH noncondensing

False Alarm Source	Distance from FL500 (ft)	Trouble / False Alarm
Direct sunlight	3	N
Reflected sunlight	3	N
Arc weld dc 190A, 7014 rod	15	N
Arc weld ac 90A, 7014 rod	15	N
1500W electrical heater	2	N
6000W electrical heater	2	N
100W incandescent light	1	N
300W incandescent light	1	N
Two 34W fluorescent light	1	N
500W halogen light	2	N
100W UV backlight	3	N
250W vapor lamp	3	N
Two 25W tungsten incan-descent lamps	3	N

9 Approvals

CSA (CSA 18.70180732X), FM, ATEX (Sira 18ATEX1073X), IECEx (SIR 18.0026X), HART Registered, SIL 3 suitable.

MSA
The Safety Company

For local MSA contacts, please visit us at ***MSAsafety.com***

Because every life has a ***purpose...***